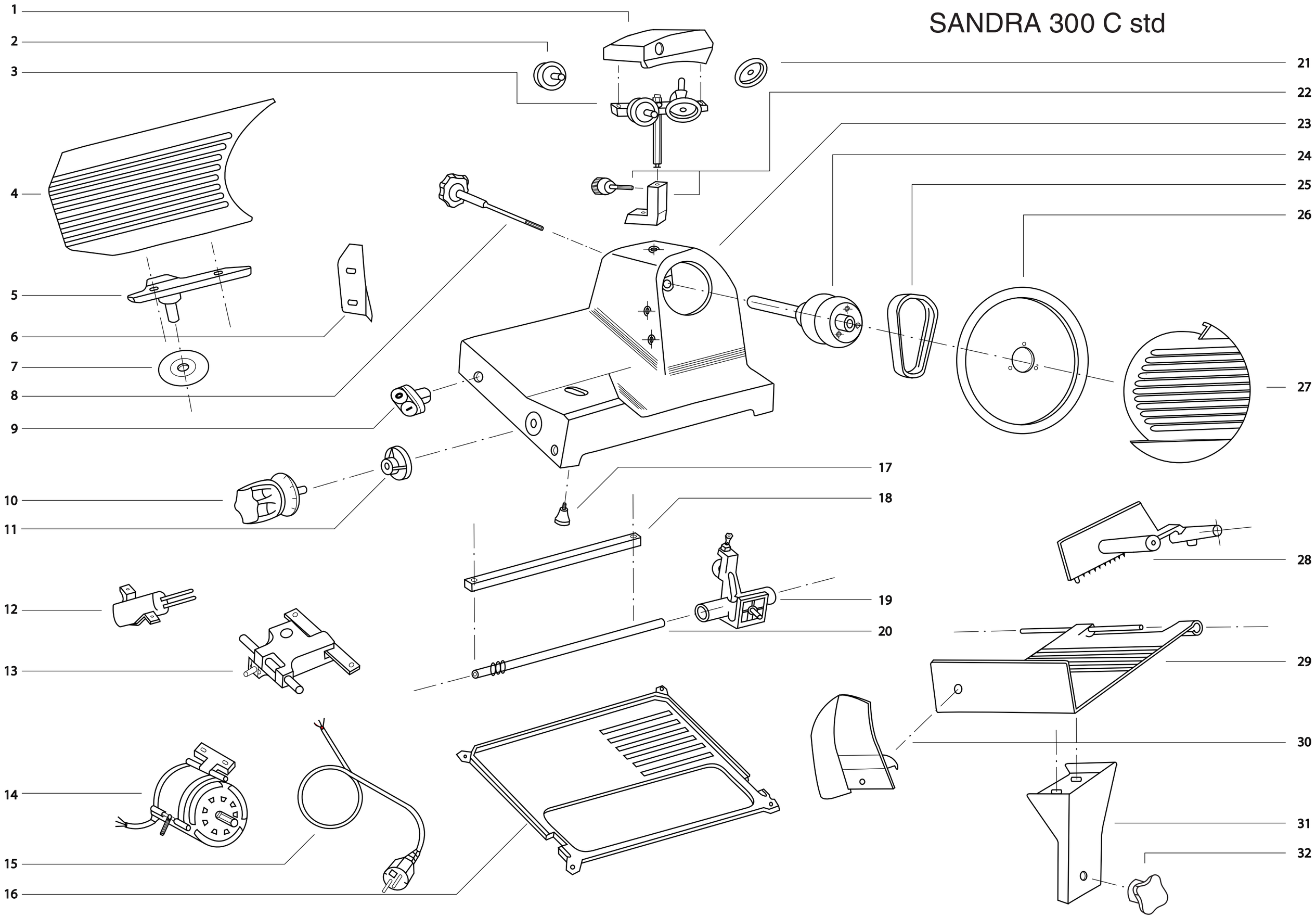SANDRA 300 C std